P A S S A G E

An exploration into St. Stephen's Plaza

Design for LDDA of Longmont, Colorado
&
LAND 4100 Capstone in Landscape Architecture

Environmental Design Program,
CU Boulder, Colorado

Instructor: Jesse Van Horne

Package by:
Kate Burgess - burgesskate58@gmail.com
Tiffany Filatov - tiffany.filatov@gmail.com
Gabe Onderdonk - onderdonkdesigns@gmail.com
Alec Stolz - alec.p.stolz@gmail.com

TABLE OF CONTENTS:

1
Visibility Study
Sun/Shade Study
Site Plans

3
Fire Feature
Water Feature
Built-In Bench Feature
Shade Structure

5
Maintenance Plan
Cost Plan
Conclusion

Narrative
Breezeway Studies
Parking Studies

2
Planting Plan
Demo Plan
Proposed Plan
Lighting Plan
Features Plan
Decking Plan

4
Built-In Bench
Seating
Art Pedestal
The Kitchen Wall
Kid Zone
Lighting

6

NARRATIVE:

The Passage is our new exploration and renovation of St. Stephen's Plaza located on Main Street in Longmont, Colorado. Our team has developed a new plan and design to help replicate and upgrade the successful breezeways located in downtown Longmont. We opened up the site lines from Main Street to the back alley to allow a safe path from the pedestrian mall to the parking.

We also added seating on the North side of the site to allow groups of all sizes to gather and linger. The plan is to take out the broken fountain and replacing it with a circular fire pit to encourage families and groups to soak up the warmth on a cold day. We have added movable seating and two potential stage areas for different programming.

Because of the noise off Main Street we believe a water feature and foliage can help reduce the high noise level. Safety and way-finding are a main priority. Down-lights will be added under our platform structures along with light poles along the back parking spots that can move around the site if the alley were to be made open for an event.

We believe by replicating and upgrading St. Stephen's Plaza to perform as a breezeway and plaza/gathering space it will allow more of the community to use this beautiful corner of Longmont for relaxing, events, gatherings, and much more.

EXISTING BREEZEWAY STUDY:

This diagram depicts how St. Stephen's Plaza naturally mimics the other breezeways in Longmont and yearns to be further developed. These successful breezeways bring a sense of safety and warmth in a space that is usually cold and dangerous. We appreciate this thought out design idea and believe it would be successful for St. Stephen's Plaza.

1

2

3

4

5

EXISTING BREEZEWAY STUDY:

We analyzed how breezeways are the backbone of pedestrian circulation throughout Longmont's Downtown Corridor.

KEY:

- Proposed Breezeway
- Existing Breezeway
- Alley Way

Common themes in each breezeway:

- Pedestrian Access & Way-finding
- Art, Sculptures, & Murals
- Plants

EXISTING PARKING STUDY:

Parking is one of down town Longmont's greatest hidden secrets. Located behind retail businesses and offices they have separated the spaces and have created a balance in the downtown district. We have located all adjacent parking to our site for reference of our design.

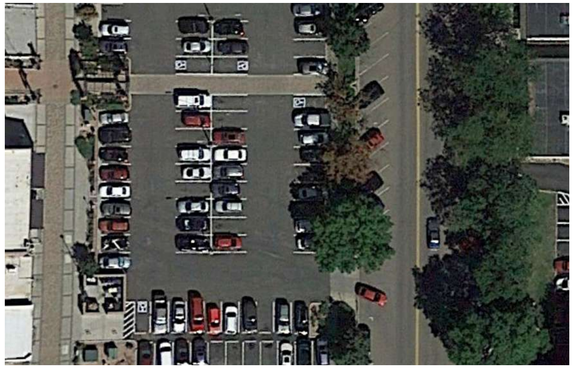

VISIBILITY STUDY :

We noticed that a large reason why people will not pass through and stay in St. Stephen's Plaza is because it prevents people from being able to see through to the other side. If people cannot see a clear secondary exit (different from the one they entered through), they will tend not to go that way. This is something that needs to change with future design if this space is to be successful.

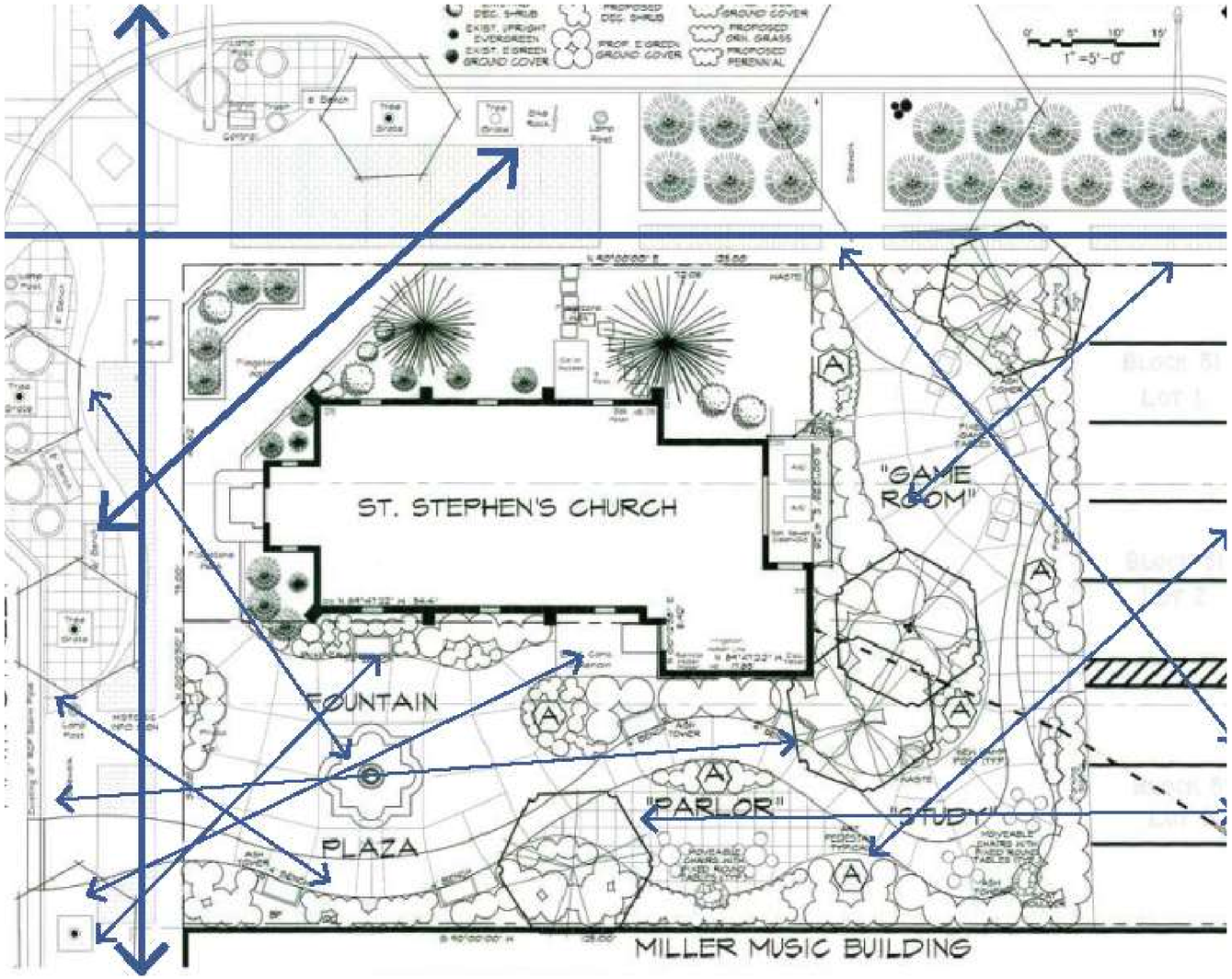

SUN/SHADE ANALYSIS:

Through extensive analysis of the sun's path over St. Stephen's plaza we have come to a few conclusions. With a tall south wall the winter months are cold and dark. The higher sun in the summer will cause the west and east sides of the site can reach extremely high temperatures with the sun hitting the concrete paving. To accommodate the temperature changes we have designed a shade structure, fire pit, and warmer materials.

Summer Light:

Winter Light:

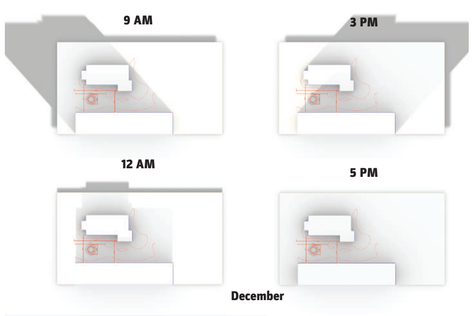

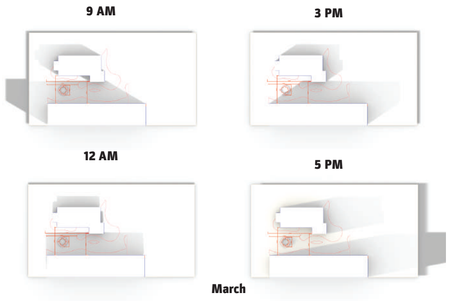

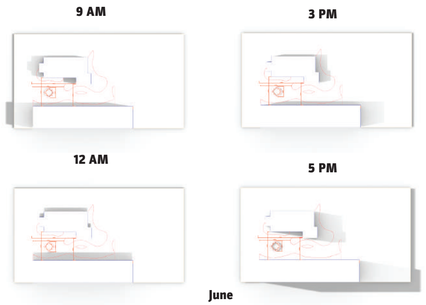

PROPOSED SITE PLAN:

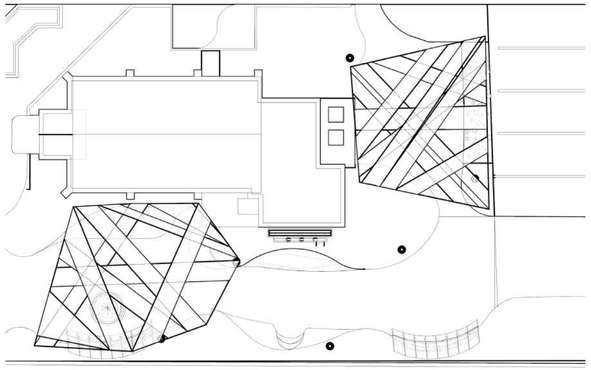

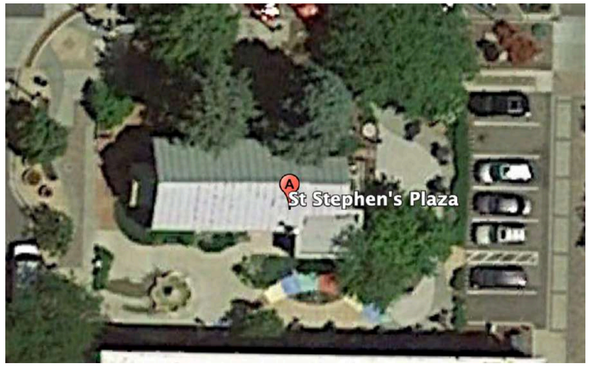

DEMO PLAN:

1. Existing Fountain
2. Maple Tree
3. Japanese Lilac Tree
4. Existing Concrete
5. Existing Art Pedestals
6. 1-2 Existing Parking Spaces
7. Game Board

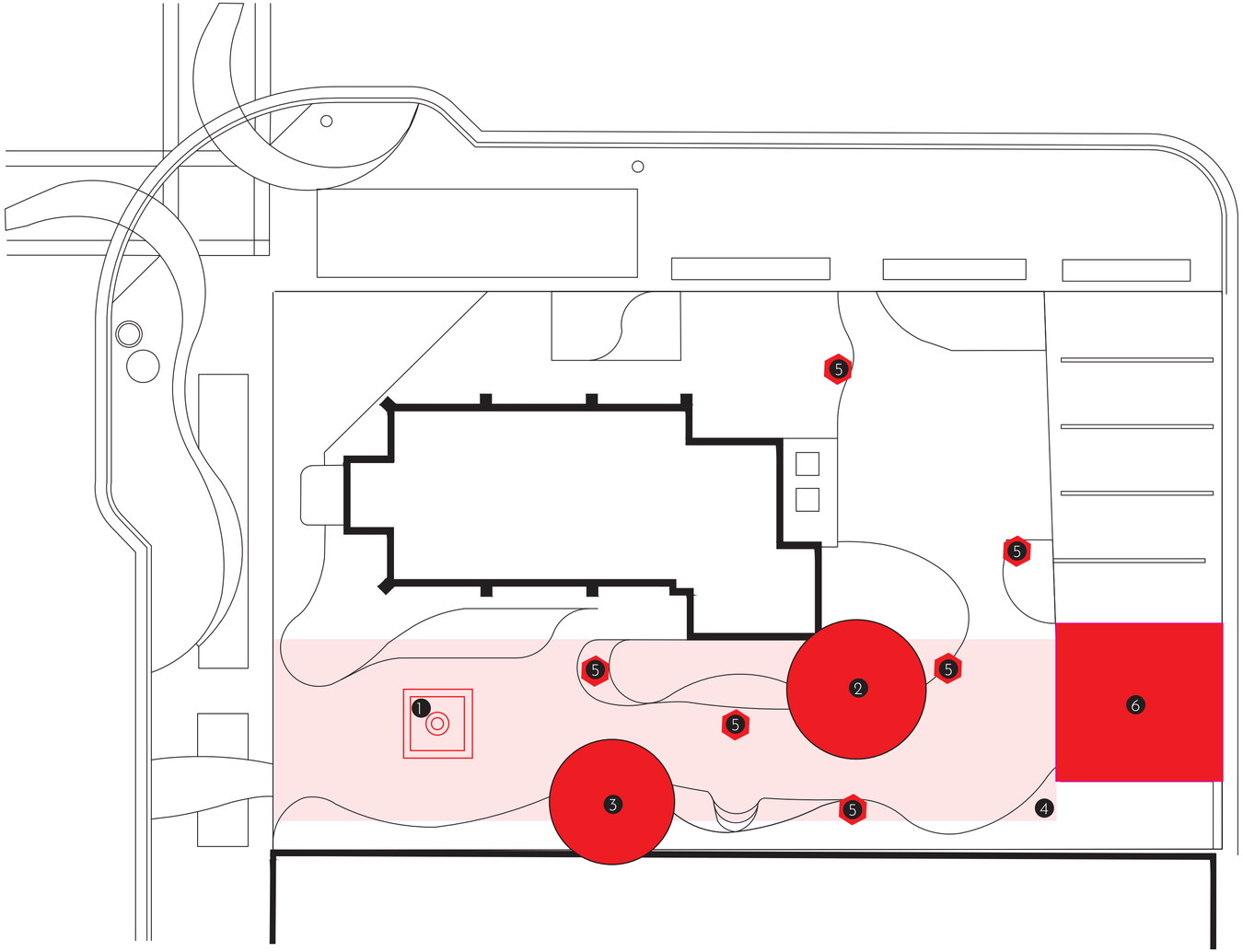

EXISTING SITE FEATURES:

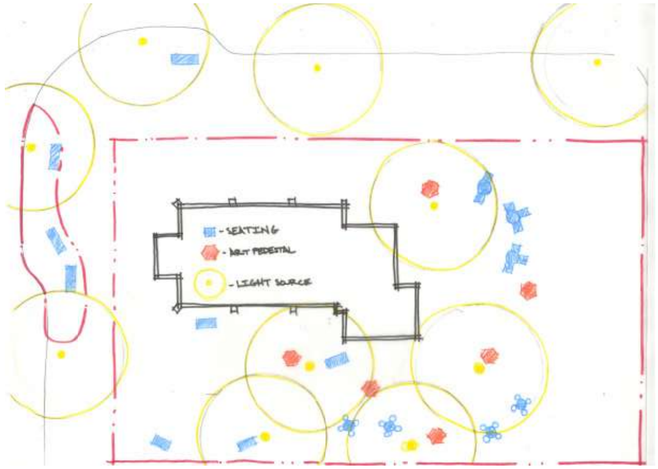

PROPOSED FEATURE PLAN:

1. Decks
2. Small Stage
3. Seating
4. Water Feature
5. Fire Feature
6. Shade Structure
7. Breezeway
8. In Ground Art Pedestals
9. Kid Zone
10. Light Installation
11. Art on Wall (Mural / Vines)
12. Paving
13. Landscape Bump-Out

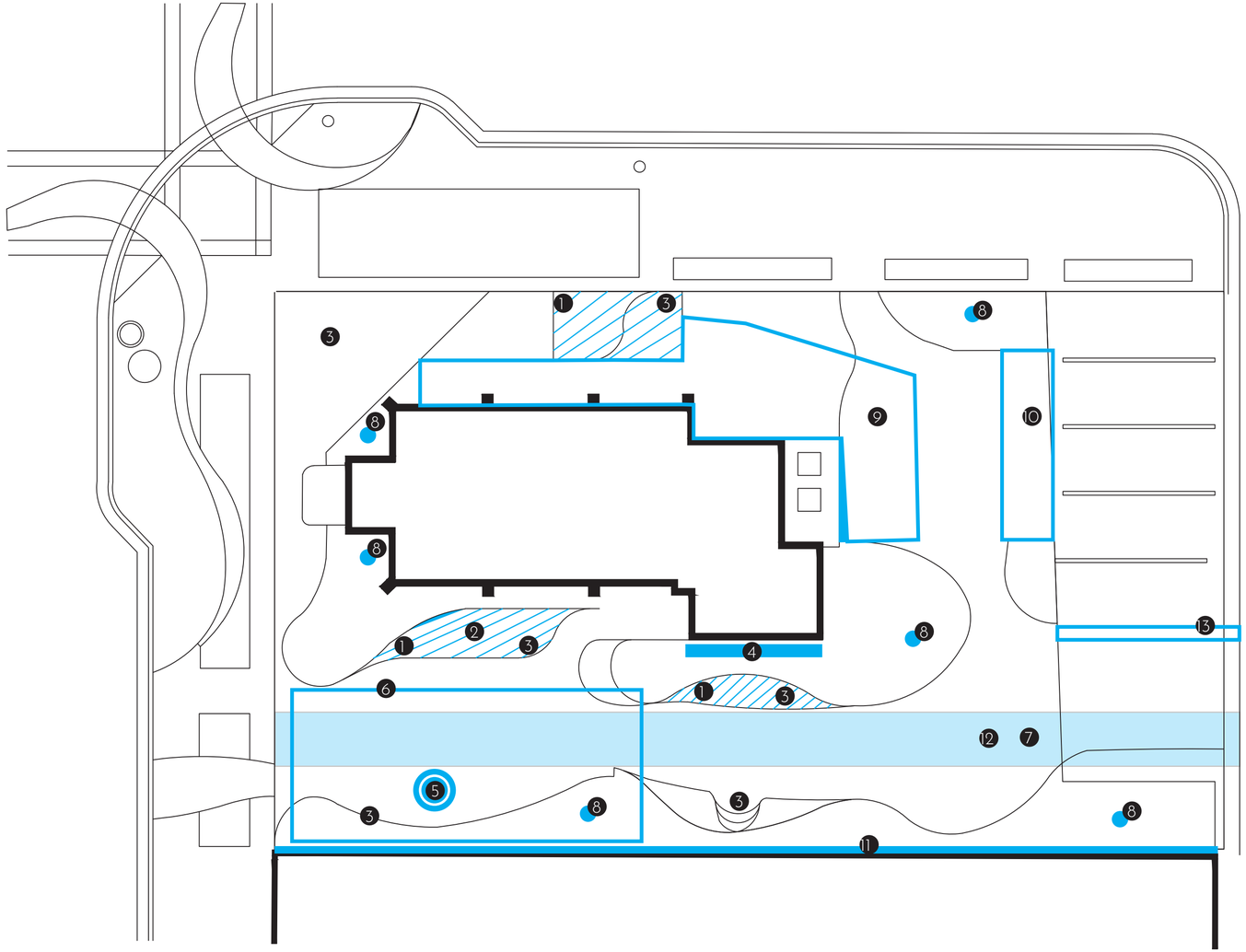

LIGHTING PLAN:

1. Down Lighting
2. Light Sculpture
3. Existing Light Poles
4. Existing String Lights
5. Shade Structure

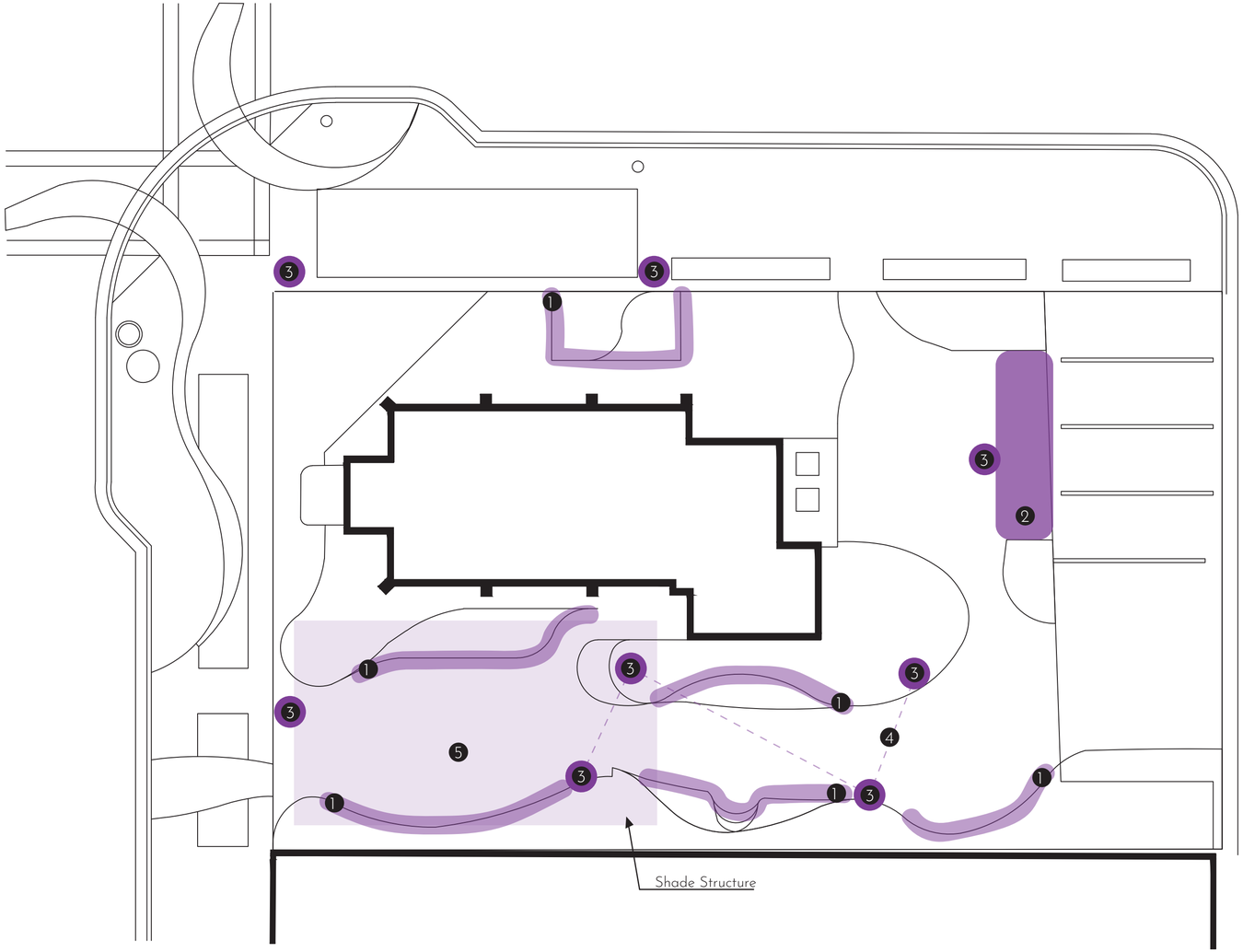

PLANTING PLAN:

Medium Sun

Low Shade

Texture/Noise Barrier

Symbol	Common Name	Latin Name	Size	Notes
BF	Blue Fescue	Festuca glauca	1 ft	Small Grass, winter interest
BG	Blue Grama	Bouteloua gracilis	2-3 ft	Grass with curly seed heads, winter interest
CMD	Carol Mackie Daphne	Daphne x burkwoodii	3-4 ft	Shrub with year-round interest, purple flowers in spring
CWC	Coloratus Winter Creeper	Euonymous Fortunei	1-12 ft	Groundcover with leaves that turn purple in winter
EPC	Eastern Purple Coneflower	Echinacea purpurea	1-3 ft	Perennial with tall, purple flowers throughout summer and fall
EI	English Ivy	Hedera helix	1-15 ft	Vine with year-round interest
EL	English Lavender	Lavandula angustifolia	2-3 ft	Perennial with tall Purple flowers in spring
FB	Fern Bush	Chamaebatiaria millefolium	3-5 ft	Shrub with white flowers throughout summer
GC	Golden Columbine	Aquilegia chrysantha	1.5 ft	Yellow flowers throughout summer
KK	Kinnickkinnick	Arctostaphylos uva-ursi	1-15 ft	Evergreen Ground cover with red berries
FRG	Korean Feather Reed Grass	Calamagrotis brachytricha	2-3 ft	Grass, winter interest
MH	Meserve Holly	Ilex meserveae	4 ft	Shrub with year-round interest, red berries
ML	Mountain Lover	Paxistima canbyi	1-2 ft	Evergree Ground cover
NB	Ninebark	Physocarpus opulifolious	5-6 ft	Shrub, can tolerate shade and has white flowers in summer
PW	Periwinkle	Vinca minor	1-1.5 ft	Groundcover with purple flowers during summer
PP	Pinon Pine Shrub	Pinus monophylla	2 ft	Dwarf Conifer
RS	Red Salvia	Salvia darcyi	3-5 ft	Perennial with tall, red flowers throughout summer and fall
HB	Ruby Moon Hyacinth Bean	Dolichos lablab	3-8 ft	Vine with dark purple flowers
SS	Saskatoon Serviceberry	Amelanchier alnifolia	4-15 ft	Shrub with year-round interest, White flowers in spring
SG	Silver Grass	Miscanthus sinensis	4 ft	Grass, winter interest
TH	Trumpet Honeysuckle	Lonicera sempervirens	3-20 ft	Vine with Red flowers
TV	Turkish Veronica	Veronica liwanensis	1-1.5 ft	Ground cover with small purple flowers, blooms spring
WC	Winecups	Callirhoe involucrata	4-6 ft	Ground cover with crimson flowers, blooms spring to first frost

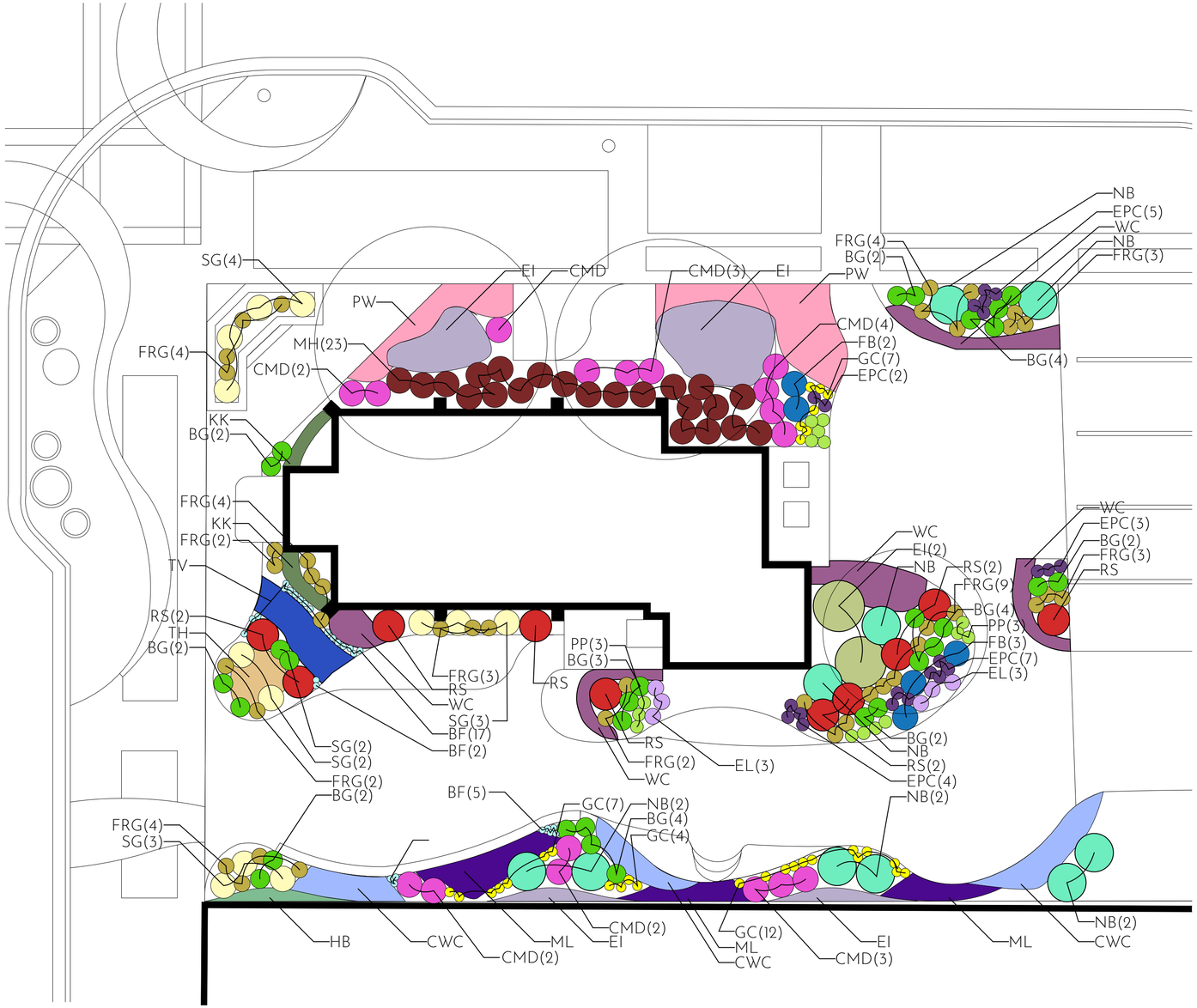

DECKING CONSTRUCTION DETAIL:

To the right we have a detail of how our decking structure would be built on site. With four simple materials it will have low maintenance and will bring an upscale look to the site by breaking up the materiality on the ground level. Below is a precedent image of the glow of the under lighting we want to bring to the decking structure.

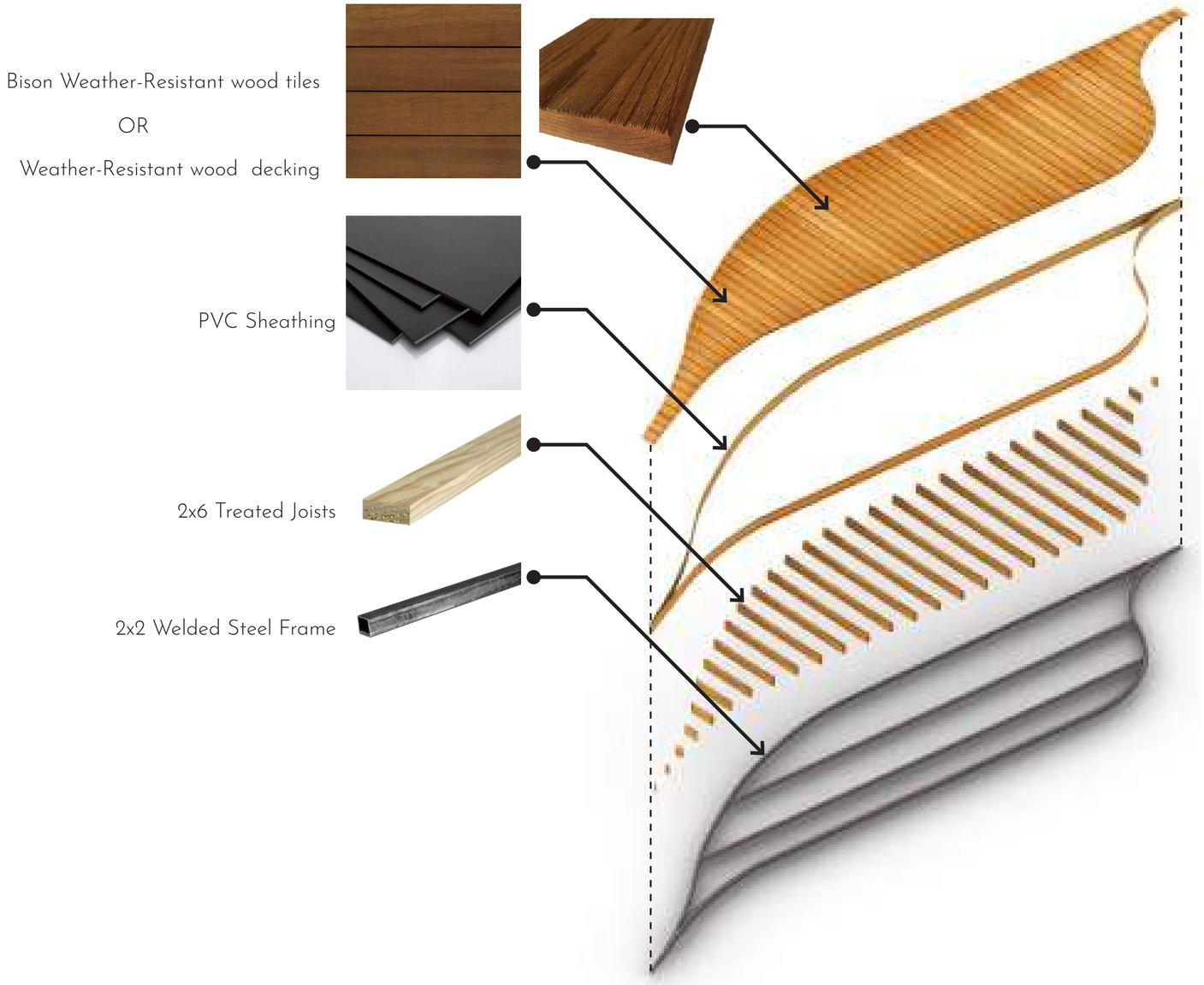

STAGE PERSPECTIVES:

The stage is an important feature we brought on to the site but not our main focus. Any of the small decking structures can be easily transformed into a stage with the removal of the movable seating. These deck structure are designed to be multi-functional pieces that can be used for a coffee bar, seating area, or small stage. For larger events we suggest utilizing a large rental stage that can be moved to the back alley area. Both east and west sides can be used for meeting areas or a stage area.

FIRE FEATURE DETAIL:

Detail Diagram:

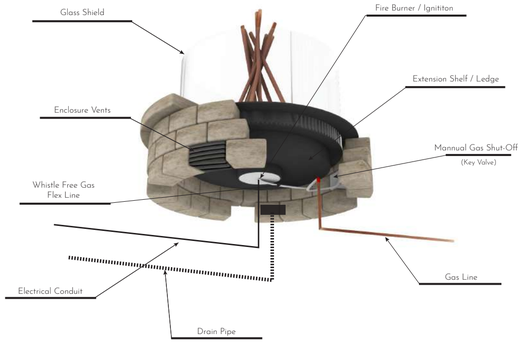

Section:

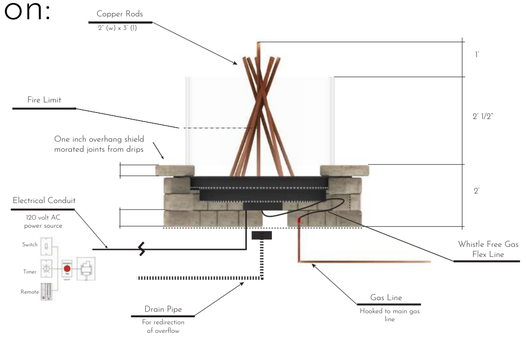

Plan:

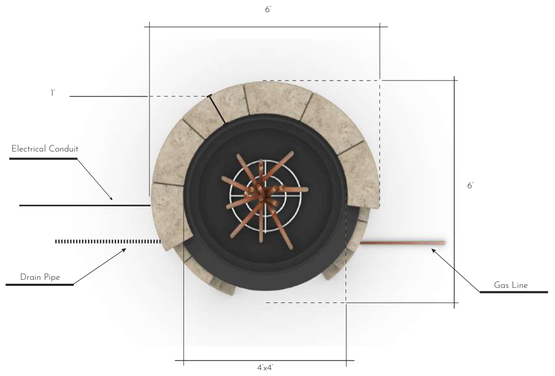

Detail Perspective:

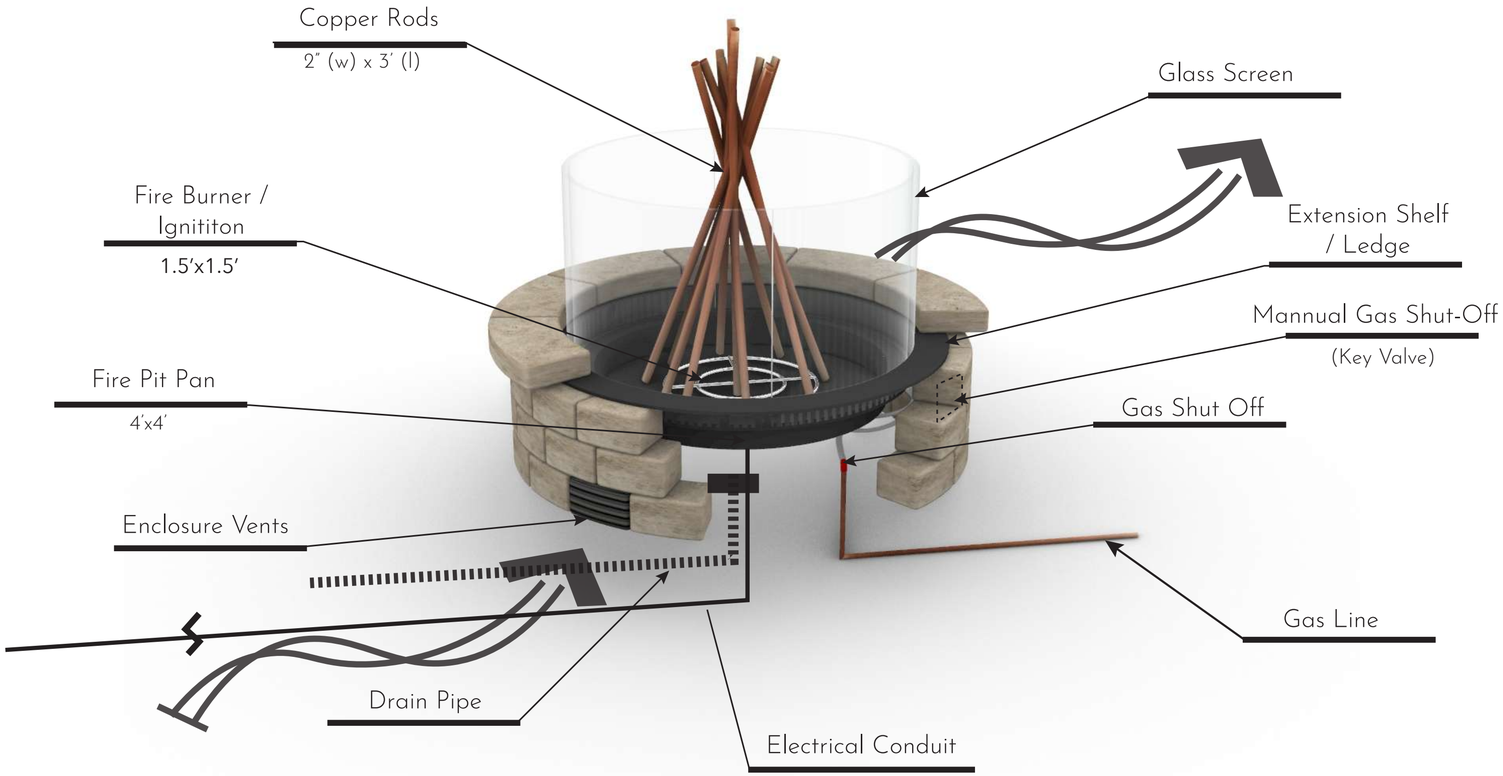

By bringing a fire feature to the site, we are inviting the community to stay and linger in St. Stephen's Plaza. This initial "WOW" feature will encourage users to explore and experience the space to another level. During the cold winter months this will heat and illuminate the space to give a peaceful and comfortable energy.

WATER FEATURE:

Elevation:

Section:

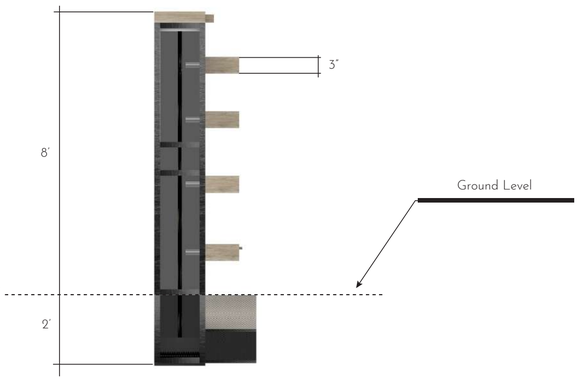

Front Diagram:

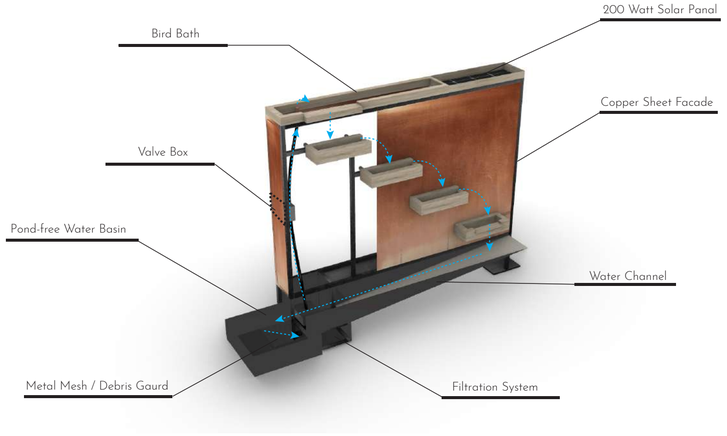

Plan:

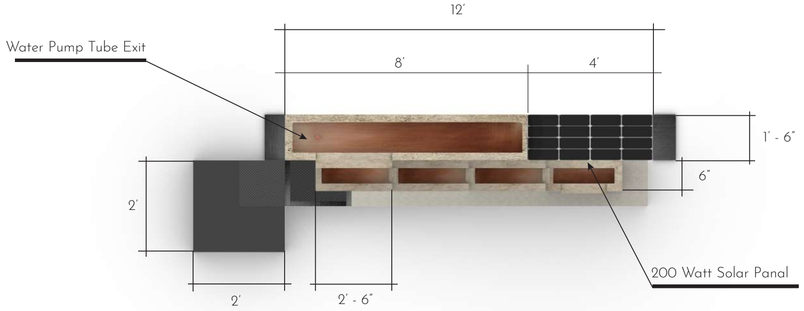

Filtration Diagram:

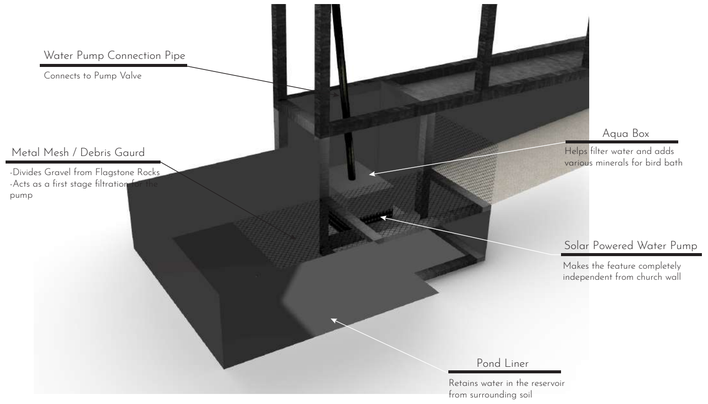

Back Diagram:

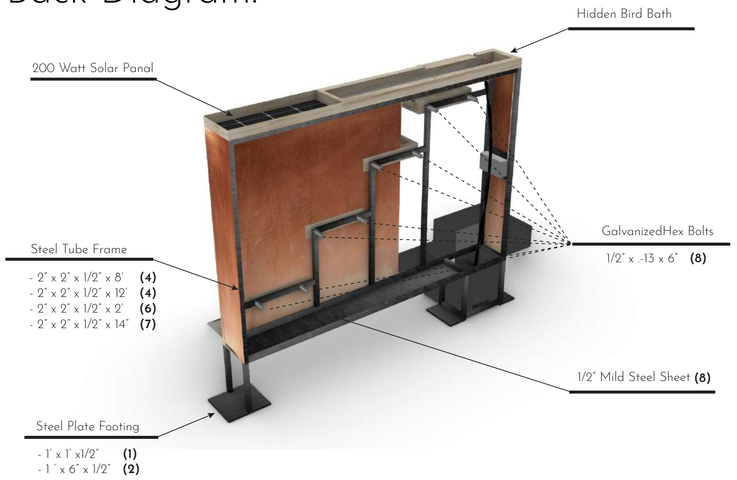

SHADE STRUCTURE:

Details:

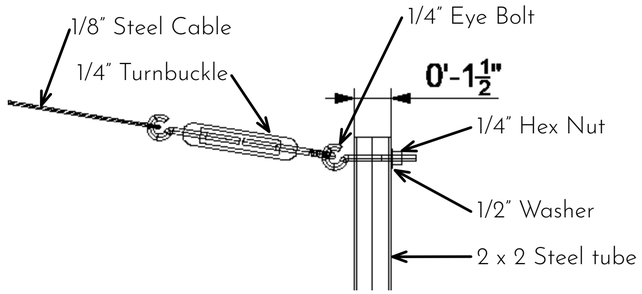

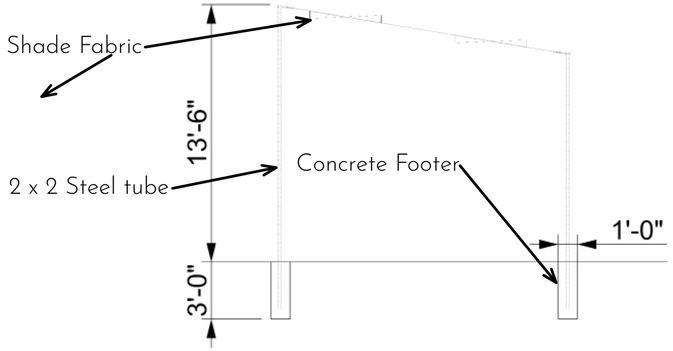

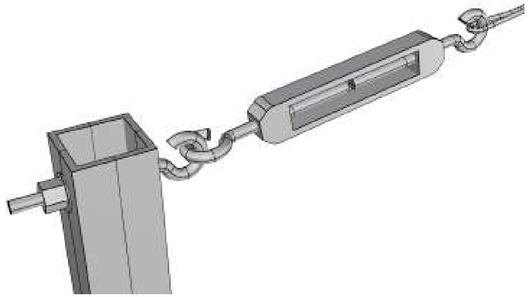

Option 1:

Option 2:

Above is a diagram of our canvas shading structure located in the East and West portions of St. Stephen's Plaza. This will help with the heat in the summers and create shade for the users. By having the range height between 10-12 feet we are drawing the eye down from the 35 foot wall on the south side of the site. We suggest bright colors to add to the "art district" feel.

FEATURE PERSPECTIVE:

Precedents:

BUILT-IN SEATING ON THE SOUTH WALL:

Planting Detail:

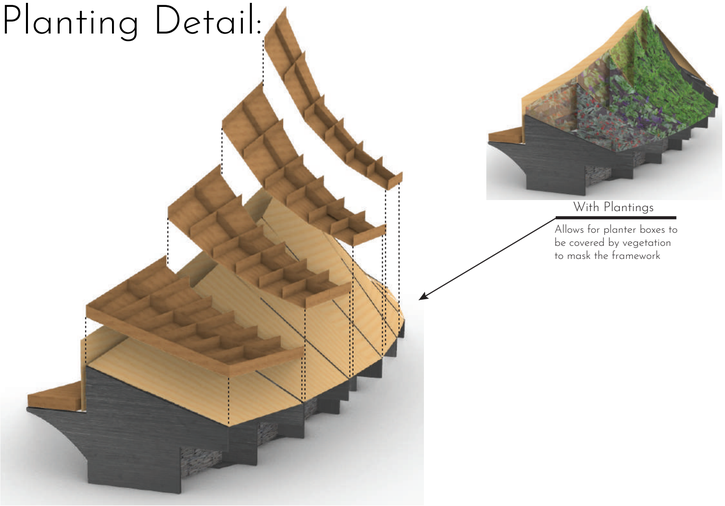

Perspective:

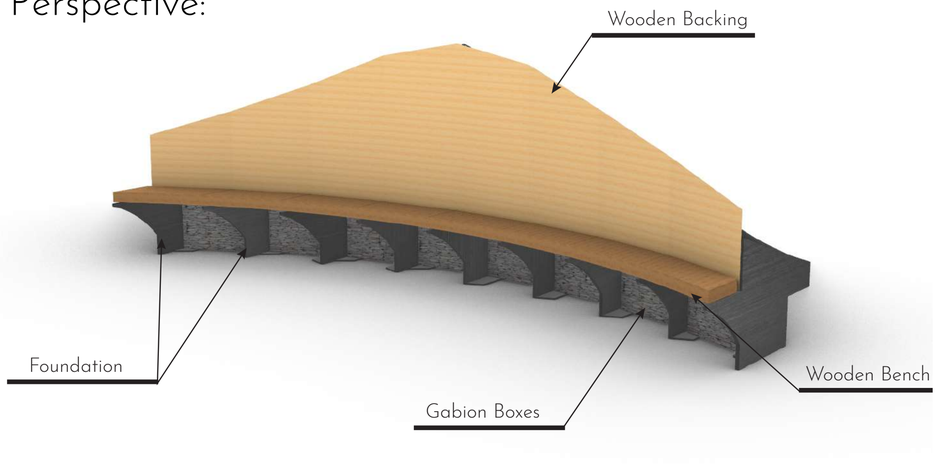

Section:

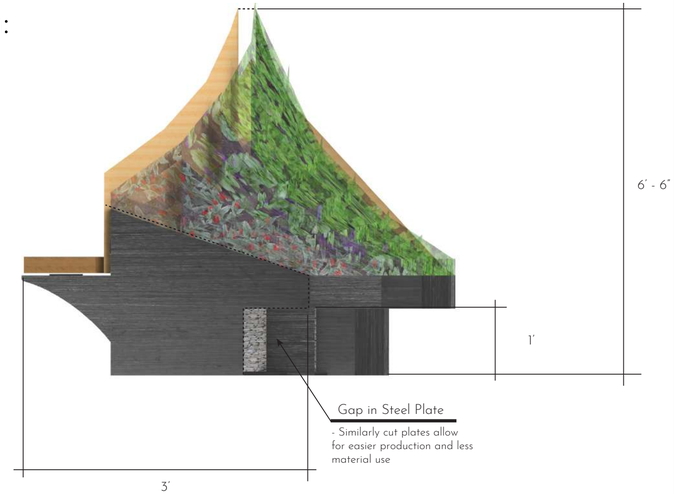

Construction Detail:

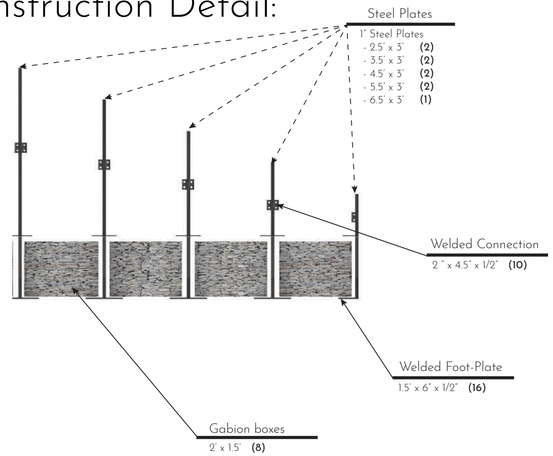

Plan:

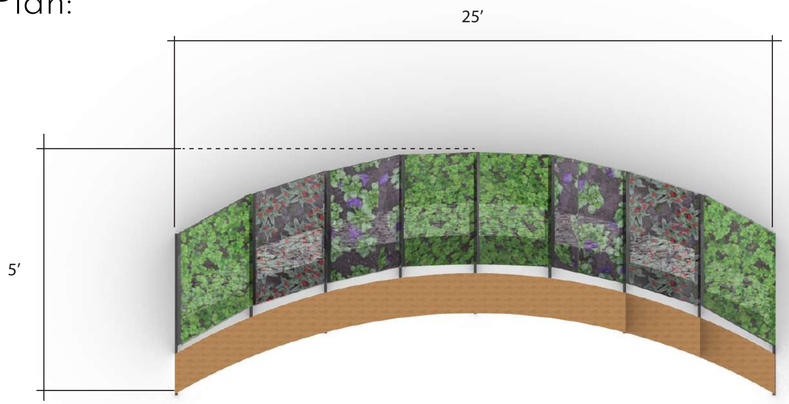

Model Study:

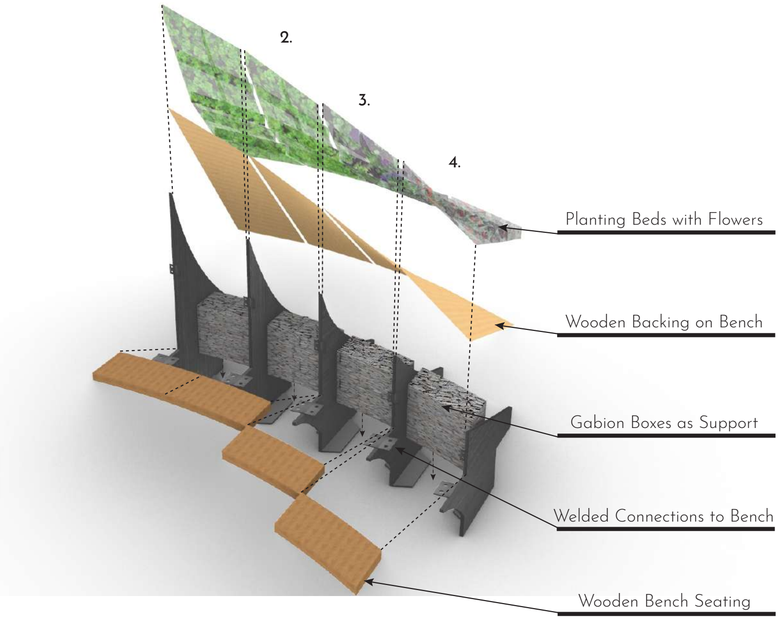

Here is the full design and construction elements to our built in bench located a few feet off of the South wall. A curvilinear design was incorporated to suggest group gatherings and by having a long bench structure can accommodate single people and groups comfortably.

SEATING & TABLES:

The psychological importance of movable furniture on a public space elevates a design to a different level. By having smaller and lighter furniture our breezeway will really open up. "Unlike bolted down chairs or other forms of hostile or unfriendly architecture, free-floating chairs provide park goers with an implicit sense of trust, and with that, a freedom to improvise."The chair itself is not magical but what it can achieve in the right circumstance is," Winn said. He added: "It shows a lot of respect to the user. People come into the space and instinctively understand the basic code of behavior."

Movable seating does run the risk of getting stolen but they are a fraction of the price point of traditional park tables and benches. With the freedom for a flexible design in St. Stephen's Plaza the movable seating will allow many more functions and programming. .

Price Comparison:

Best Choice Products Acacia Wood 3-Piece Folding Outdoor Bistro Set, Brown

★★★★ 20 reviews Best Choice Products

$119.99 List ~~$221.99~~

Add-on services (0 Selected) Show Less

Add Walmart Protection Plan powered by Allstate

None 2 Years - $19.00 3 Years - $26.00

Qty: 1 Add to Cart

36" Hamilton Table with Freestanding Seats - Surface and Inground Mount

(0) Reviews: Write first review

SKU:US 30SMS

- Solid table top is 36" diameter with 24" slat seats. 310 Lbs.
- Frame is 3" square tube with powder coated finish.
- Coated with zinc rich epoxy primer and top coated with electrostatic powdercoat, oven cured.
- All MIG welded frame with walk thru design.
- Choice of inground or surface mount.

Add items to cart for quote. Contact us for volume discounts.

$2819.00

Options Available

Table Style Options *

- US 30SMS, 36 in. Table, Surface Mt., 310 Lbs. **+$2,769.00**
- US 30SS, 36 in. Table, Inground Mt., 325 Lbs. **+$2,819.00**

- Powder Coat Colors -

Qty: 1

ART PEDESTAL & THE KITCHEN WALL DETAILS:

In-ground art pedestal section:

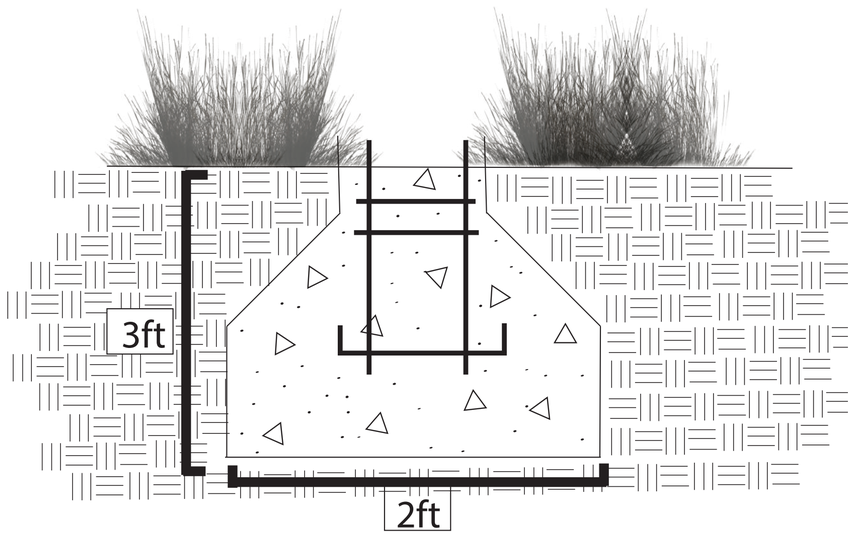

Above is a graphic representation of our in-ground art pedestals. Above the structure we will have plants to disguise the structure if no art is being attached to it. This design would be smaller and more hidden than the original design.

The Kitchen wall elevation:

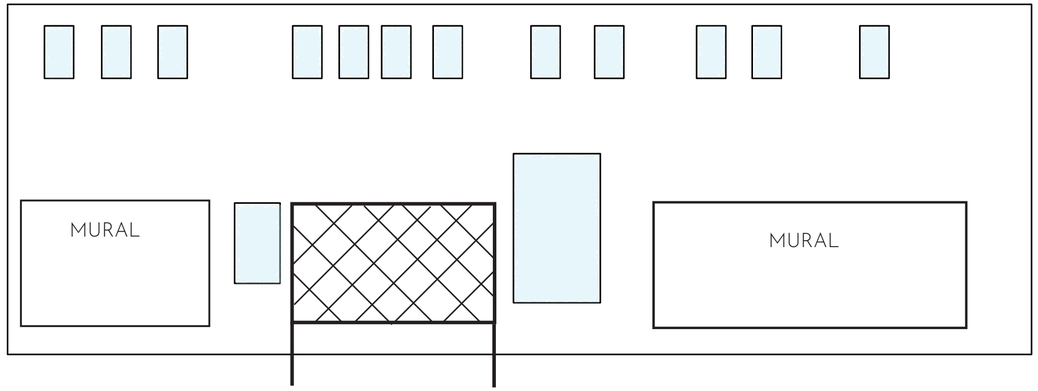

The Kitchen Wall will be composed of 3 different installations. On the East and west side there is prime real estate for rotating murals. In the middle segment we have designed a detached lattice structure for hardy plants to grow year around.

KID ZONE:

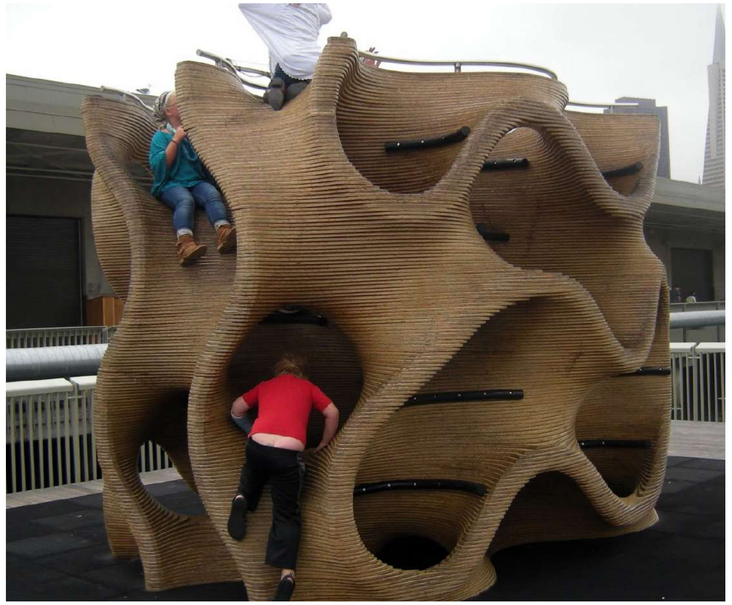

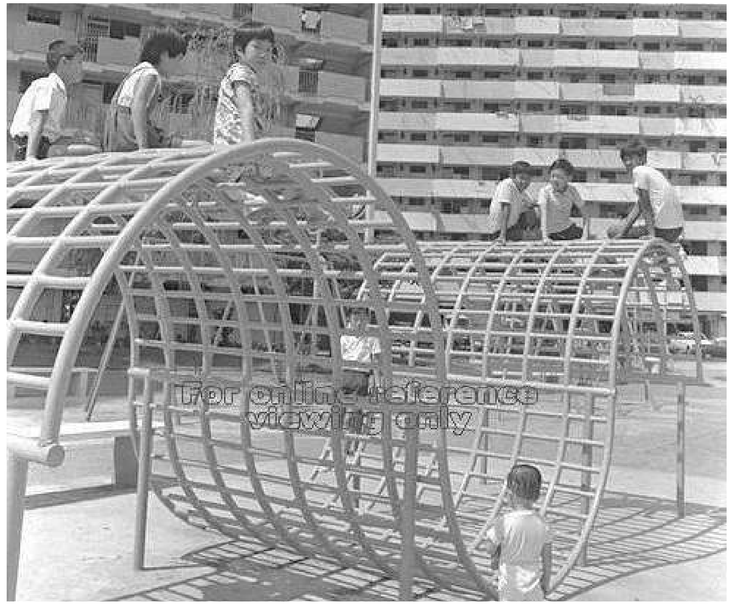

Located on the east side of the site on the back side of the church is our designated "Kid Zone". Here will hold the potential for an art piece made specifically for kids. The precedents above are all ideas of visually interesting and interactive pieces artist's have made for kids. We are suggesting in one of the final stages of this project to have an artist design a piece specifically for this space that will draw in more families and young children to St. Stephen's Plaza.

LIGHTING:

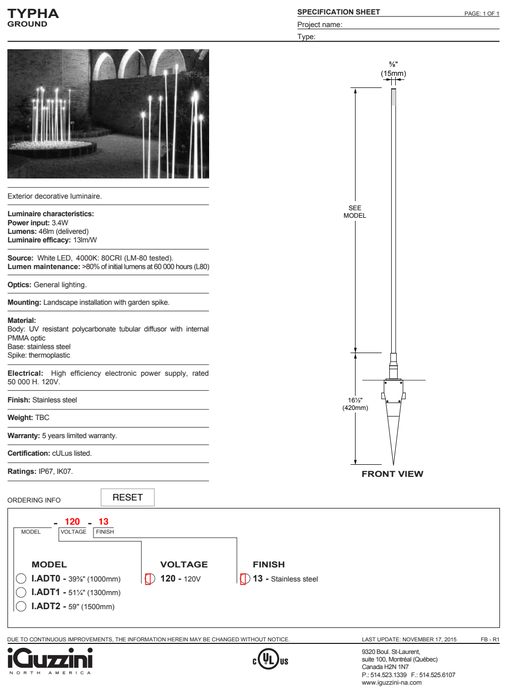

TYPHA
GROUND

SPECIFICATION SHEET PAGE: 1 OF 1
Project name:
Type:

Exterior decorative luminaire.

Luminaire characteristics:
Power input: 3-4W
Lumens: 46lm (delivered)
Luminaire efficacy: 13lm/W

Source: White LED, 4000K: 80CRI (LM-80 tested).
Lumen maintenance: >80% of initial lumens at 60 000 hours (L80)

Optics: General lighting.

Mounting: Landscape installation with garden spike.

Material:
Body: UV resistant polycarbonate tubular diffusor with internal PMMA optic
Base: stainless steel
Spike: thermoplastic

Electrical: High efficiency electronic power supply, rated 50 000 H. 120V.

Finish: Stainless steel

Weight: TBC

Warranty: 5 years limited warranty.

Certification: cULus listed.

Ratings: IP67, IK07.

ORDERING INFO RESET

- 120 - 13
MODEL VOLTAGE FINISH

MODEL
- **I.ADT0** - 39⅜" (1000mm)
- **I.ADT1** - 51⅛" (1300mm)
- **I.ADT2** - 59" (1500mm)

VOLTAGE
- **120** - 120V

FINISH
- **13** - Stainless steel

DUE TO CONTINUOUS IMPROVEMENTS, THE INFORMATION HEREIN MAY BE CHANGED WITHOUT NOTICE. LAST UPDATE: NOVEMBER 17, 2015 FB - R1

iGuzzini NORTH AMERICA

9320 Boul. St-Laurent,
suite 100, Montréal (Québec)
Canada H2N 1N7
P.: 514.523.1339 F.: 514.525.6107
www.iguzzini-na.com

To separate the parking spots and the plaza we have found a beautiful light pole design. This would be able to be moved and redistributed around St. Stephen's Plaza if there was an event taking place using the back alley.

The iGuzzini Typha will achieve this look by using a spike base that is flushed with the ground. By having the bases around the site these will be movable and adjustable depending on the programming happening in the alley. Artists could also be brought in to design something similar for the site.

We want to apply to down-light design to all of the raised decking structures. This will inform users of different raised areas and avoid a tripping hazard. The level of light close to the users feet will guide them through our breezeway.

One of our main design goals is to create a safer passage way from the pedestrian side of Main Street to the parking located in the back.

ALLEY ENTRANCE PERSPECTIVE:

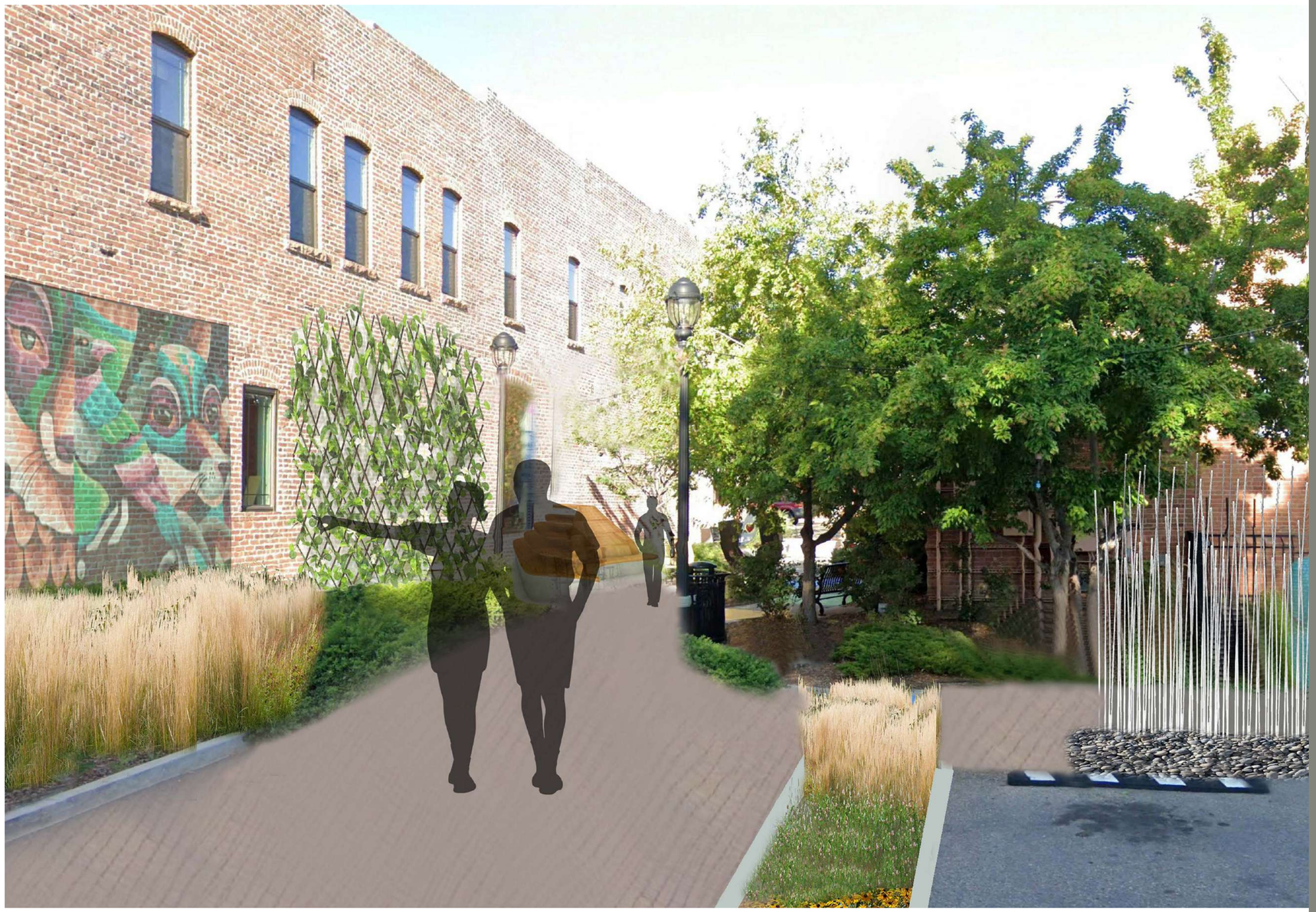

MAINTENANCE PLAN & COST ESTIMATES:

Plantings: The planting plan of PASSAGE fits the context of a Colorado gathering space way better than the previous planting design. The chosen plants are well suited to the dry weather and long winters that Colorado's climate brings. Planting is intended to provide vertical interest through vines, large shrubs, perennials, and ornamental grasses. PASSAGE also includes many plants such as broad-leaf evergreens and ornamental grasses that provide interest throughout the winter.
Seating: No maintenance required except for the removal of movable furniture for events.
Decking: No maintenance except seasonal cleaning for weather resistant decking.
Shade Structure: Removal of shade structure in winter months and replaced if it gets faded over time.
Light Poles: No maintenance required except changing of LED lights.
Built in bench: Snow removal.
Fire feature: Regular Maintenance is required to ensure safety while the feature is in use. Regular cleaning of flammable debris is required when necessary circumstances arise. Major maintenance is minimal due to the minimalistic design and functionality of the feature.
Water feature: There is no real maintenance regarding the upkeep of this feature, however, caution has to be taken to ensure that the water pumps continue to function regularly and as efficiently as possible. This feature is also self circulating and free standing, meaning that it functions independently from the surrounding features of the site.
Art Pedestals: None

COST ESTIMATES::

Landscaping	$10-25k
Movable Seating	$500-1k
Decking	$5-8k
Shade Structure	$6-8k
Light Poles	$1-10k
Built-In-Bench	$20k
Fire Features	$5k
Water Feature	$3k
Art Pedestal	$500 each

PERSPECTIVE:

THANK YOU!